KITCHEN CABINET SPECIFICATIONS

FOR THESE STYLES

Auburn Glaze | Dark Chocolate | Ginger Glaze | Santa Fe Rope |
Cinnamon Shaker | Brandy Wine | Classic Espresso | Classic White | Peppercorn | Traditional White | Traditional Espresso

CLICK HERE FOR ASSEMBLY INSTRUCTION VIDEOS

Wall Cabinets

NOTE: Not all items are available for all lines.

LINE DRAWINGS (presented in architectural orthogonal view)	CODE	DESCRIPTION
Wall - Single Door		**12" Depth**
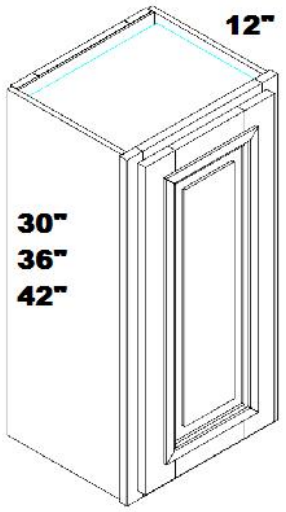	W0930 W1230 W1530 W1830 W2130 W0936 W1236 W1536 W1836 W2136 W0942 W1242 W1542 W1842 W2142	Wall - 09"W x 12"D x 30"H - 1 Door Wall - 12"W x 12"D x 30"H - 1 Door Wall - 15"W x 12"D x 30"H - 1 Door Wall - 18"W x 12"D x 30"H - 1 Door Wall - 21"W x 12"D x 30"H - 1 Door Wall - 09"W x 12"D x 36"H - 1 Door Wall - 12"W x 12"D x 36"H - 1 Door Wall - 15"W x 12"D x 36"H - 1 Door Wall - 18"W x 12"D x 36"H - 1 Door Wall - 21"W x 12"D x 36"H - 1 Door Wall - 09"W x 12"D x 42"H - 1 Door Wall - 12"W x 12"D x 42"H - 1 Door Wall - 15"W x 12"D x 42"H - 1 Door Wall - 18"W x 12"D x 42"H - 1 Door Wall - 21"W x 12"D x 42"H - 1 Door ***30" & 36" Tall Cabinets have 2 shelves*** ***42" Tall Cabinets have 3 shelves***
Wall - Double Door		**12" Depth**
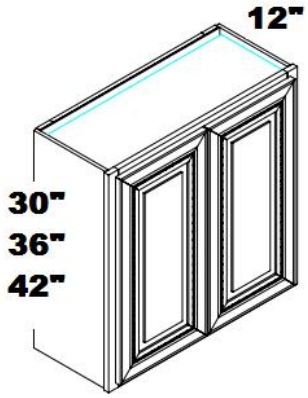 ***30" & 36" Tall Cabinets have 2 shelves*** ***42" Tall Cabinets have 3 shelves***	W2430 W2730 W3030 W3330 W3630 W4230 W4830 W2436 W2736 W3036 W3336 W3636 W2442 W2742 W3042 W3342 W3642	Wall - 24"W x 12"D x 30"H - 2 Door Wall - 27"W x 12"D x 30"H - 2 Door Wall - 30"W x 12"D x 30"H - 2 Door Wall - 33"W x 12"D x 30"H - 2 Door Wall - 36"W x 12"D x 30"H - 2 Door Wall - 42"W x 12"D x 30"H - 2 Door Wall - 48"W x 12"D x 30"H - 2 Door Wall - 24"W x 12"D x 36"H - 2 Door Wall - 27"W x 12"D x 36"H - 2 Door Wall - 30"W x 12"D x 36"H - 2 Door Wall - 33"W x 12"D x 36"H - 2 Door Wall - 36"W x 12"D x 36"H - 2 Door Wall - 24"W x 12"D x 42"H - 2 Door Wall - 27"W x 12"D x 42"H - 2 Door Wall - 30"W x 12"D x 42"H - 2 Door Wall - 33"W x 12"D x 42"H - 2 Door Wall - 36"W x 12"D x 42"H - 2 Door *30" & 36" Tall Cabinets have 2 shelves *42" Tall Cabinets have 3 shelves
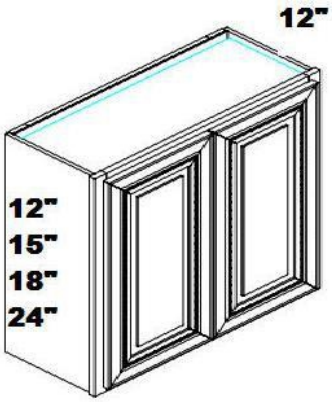	*** W3012 W3312 W3612 W2415 W3015 W3315 W3615 W2118 W2418 W3018 W3318 W3618 W2424 W3024 W3324 W3624	Wall - 30"W x 12"D x 12"H - 2 Door Wall - 33"W x 12"D x 12"H - 2 Door Wall - 36"W x 12"D x 12"H - 2 Door Wall - 24"W x 12"D x 15"H - 2 Door Wall - 30"W x 12"D x 15"H - 2 Door Wall - 33"W x 12"D x 15"H - 2 Door Wall - 36"W x 12"D x 15"H - 2 Door Wall - 21"W x 12"D x 18"H - 2 Door Wall - 24"W x 12"D x 18"H - 2 Door Wall - 30"W x 12"D x 18"H - 2 Door Wall - 33"W x 12"D x 18"H - 2 Door Wall - 36"W x 12"D x 18"H - 2 Door Wall - 24"W x 12"D x 24"H - 2 Door Wall - 30"W x 12"D x 24"H - 2 Door Wall - 33"W x 12"D x 24"H - 2 Door Wall - 36"W x 12"D x 24"H - 2 Door

Deep Wall Cabinets		24" Depth
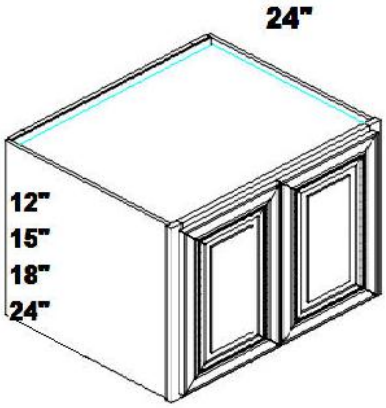	W241824 W242424 W301524 W302424 W361224 W361524 W361824 W362424	Wall - 24"W x 18"H x 24"D - 2 Door Wall - 24"W x 24"H x 24"D - 2 Door Wall - 30"W x 15"H x 24"D - 2 Door Wall - 30"W x 24"H x 24"D - 2 Door Wall - 36"W x 12"H x 24"D - 2 Door Wall - 36"W x 15"H x 24"D - 2 Door Wall - 36"W x 18"H x 24"D - 2 Door Wall - 36"W x 24"H x 24"D - 2 Door
Wall Cabinet		**with Pull-out Spice Rack**
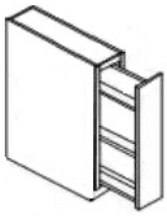	WFP930 WFP936 WFP942	Wall - 09"W x 12"D x 30"H - 1 Door Wall - 09"W x 12"D x 36"H - 1 Door Wall - 09"W x 12"D x 42"H - 1 Door
Wall Cabinet		**with 2 Built-in Draws**
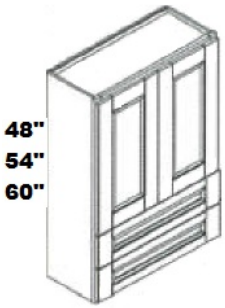	W2D1548 W2D1554 W2D1560 W2D1848 W2D1854 W2D1860 W2D2448 W2D2454 W2D2460	Wall - 15"W x 12"D x 48"H - 1 Door Wall - 15"W x 12"D x 54"H - 1 Door Wall - 15"W x 12"D x 60"H - 1 Door Wall - 18"W x 12"D x 48"H - 1 Door Wall - 18"W x 12"D x 54"H - 1 Door Wall - 18"W x 12"D x 60"H - 1 Door Wall - 24"W x 12"D x 48"H - 2 Door Wall - 24"W x 12"D x 54"H - 2 Door Wall - 24"W x 12"D x 54"H - 2 Door ***Note: Side mount full extension drawer glides. Not soft closing.***
Wall Corner Cabinet		**Blind Corner**
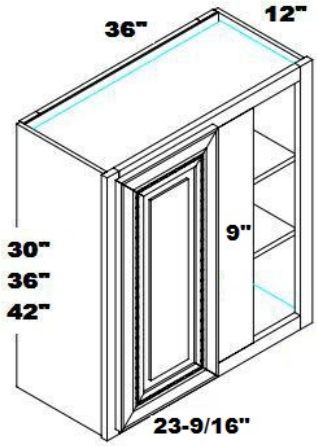	WBLC3942-3630 WBLC3942-3636 WBLC3942-3642	Blind Corner 36"W x 30"H x 12"D* Blind Corner 36"W x 36"H x 12"D* Blind Corner 36"W x 42"H x 12"D* ****NOTE: max pull to 42" with 9" center board*** ***All have 2 doors except Auburn Glaze, Blonde Birch, Dark Chocolate and Ginger Glaze***
Wall Corner Cabinet		**Diagonal Corner**
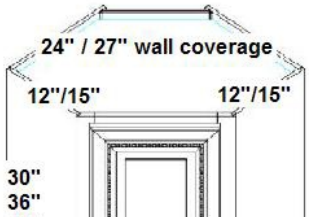	WDC2430 WDC2436 WDC2442 WDC2730	Diagonal Corner 24"W x 30"H - 12" side Diagonal Corner 24"W x 36"H - 12" side Diagonal Corner 24"W x 42"H - 12" side Diagonal Corner 27"W x 30"H - 15" side

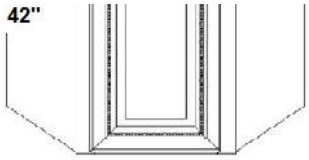	WDC2736 WDC2742	Diagonal Corner 27"W x 36"H - 15" side Diagonal Corner 27"W x 42"H - 15" side
Wall End Shelves		**12" Depth**
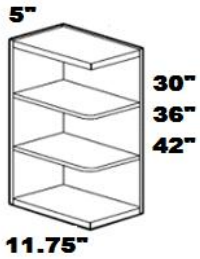	WES0530 WES0536 WES0542	11.25"W x 5"D x 30"H - 2 Shelves 11.25"W x 5"D x 36"H - 2 Shelves 11.25"W x 5"D x 36"H - 3 Shelves
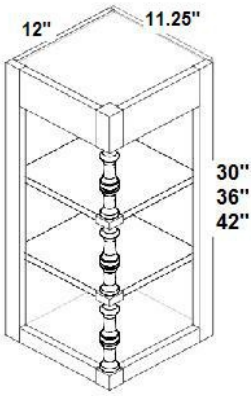	WEF1230 WEF1236 WEF1242	11.25"D x 12"W x 30"H - 2 Shelves 11.25"D x 12"W x 36"H - 2 Shelves 11.25"D x 12"W x 36"H - 3 Shelves
Wall Cabinet with Drawers and Glass Doors		**Wall Cabinet with Small Drawers**
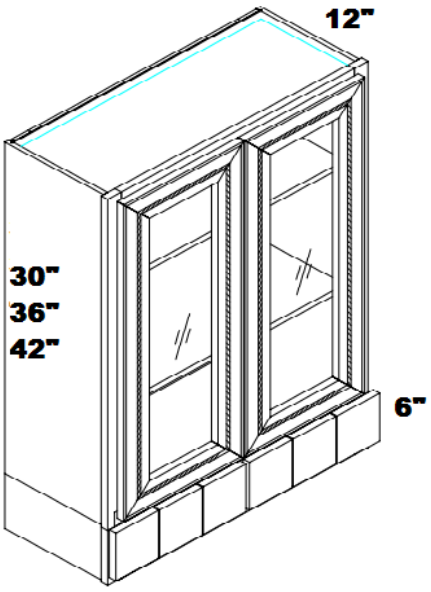	W3630BGD W3636BGD W3642BGD	36"W x 12"D x 30"H 36"W x 12"D x 36"H 36"W x 12"D x 42"H *6 - 6" H drawers across bottom are included in the overall height. Doors have glass panels
Decorator Doors		**Glass and Mullion Glass Doors**
	W1530GD W1830GD	W1530GD - for W1530 wall cabinet W1830GD - for W1830 wall cabinet

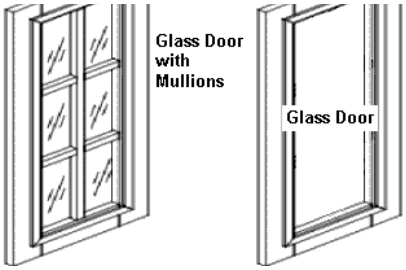 *Doors for cabinets wider than 18" come as a set of 2.*	W3030GD W3630GD W1536GD W1836GD W3036BGD W3636BGD W1542GD W1842GD W3042BGD W3642BGD WDC2430GD WDC2436GD WDC2442GD WDC2736GD WDC2742GD	W3030GD - for W3030 wall cabinet W3630GD - for W3630 wall cabinet W1536GD - for W1536 wall cabinet W1836GD - for W1836 wall cabinet W3036GD - for W3036 wall cabinet W3636GD - for W3636 wall cabinet W1542GD - for W1542 wall cabinet W1842GD - for W1842 wall cabinet W3042GD - for W3042 wall cabinet W3642GD - for W3642 wall cabinet WDC2430GD - for WDC2430 wall cabinet WDC2436GD - for WDC2436 wall cabinet WDC2442GD - for WDC2442 wall cabinet WDC2736GD - for WDC2736 wall cabinet WDC2742GD - for WDC2742 wall cabinet
Specialty Cabinet		**Micro/Wine**
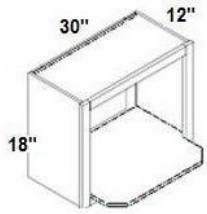 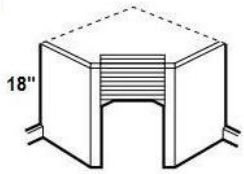 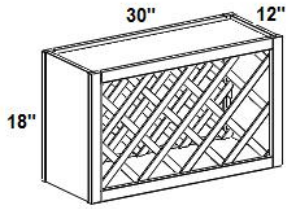 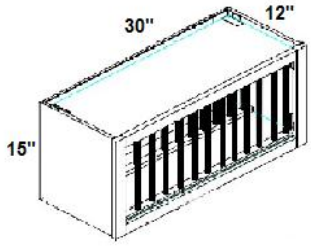	MWO3018 TAG1224 W3018WR W3015PL	Microwave Cabinet 30"W X 12"D X 18"H ***Note: Opening 27"W x 14.5" (without shelf) Shelf is 18"D x 3/4"T*** Appliance Garage 30"W x 18"H Wine Rack 30"W x 12"D x 18"H Plate Holder 30"W x 24"D x 18"H
Range Hoods		**Wooden**

WH30	WH30	Wood Hood 30"W x 8"D x 24"H
AWH36	AWH36	Wood Hood 36"W x 8"D x 24"H
CWH36 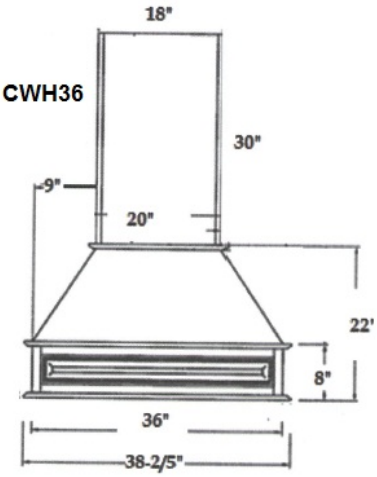	CWH36	Wood Hood 38-2/5"W x 20-1/2"D x 22+30"H (Top is trimable)
BrandyWine CWH36 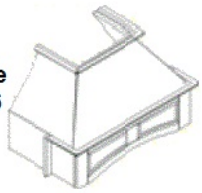 No tunnel top. Overall width 36"	CWH36	Brandy Wine Wood Hood 30"W x 8"D x 24"H
End Wall Cabinet		**Angle Wall**
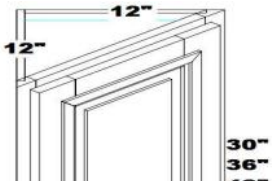	AW30 AW36 AW42	Angle Wall Cabinet 12"D X 30"H Angle Wall Cabinet 12"D X 36"H Angle Wall Cabinet 12"D X 42"H

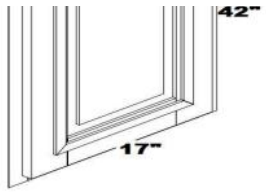

Base Cabinets

Narrow Base		Box Base
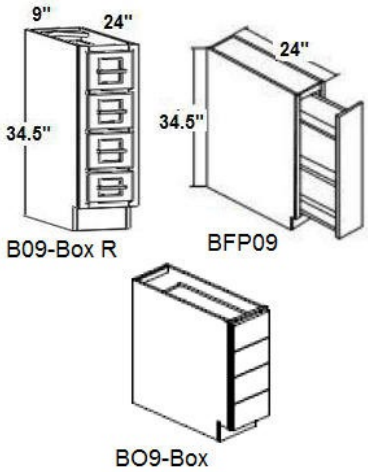	B09 Box R	9"W x 24"D x 34.5"H - 4 Spice drawers no glides. ***(has rope detail on fronts)***
	BFP09	9"W x 24"D x 34.5"H - 3 Shelves full height door
	B09 Box	9"W x 24"D x 34.5"H - 4 Spice drawers no glides (flat panel)

Single Door Base		Regular Base
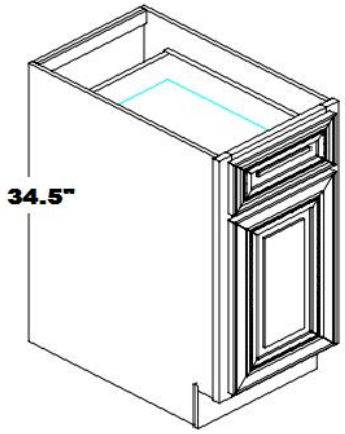	B09	9"W x 24"D x 34.5"H Base - 1 Door 1Dwr
	B12	12"W x 24"D x 34.5"H Base - 1 Door 1Dwr
	B15	15"W x 24"D x 34.5"H Base - 1 Door 1 Dwr
	B18	18"W x 24"D x 34.5"H Base - 1 Door 1 Dwr
	B21	21"W x 24"D x 34.5"H Base - 1 Door 1 Dwr

Double Door Base		
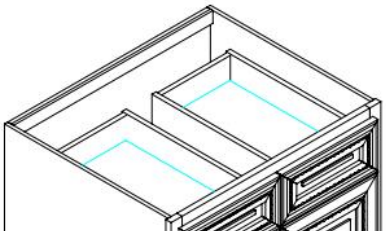	B24	24"W x 24"D x 34.5"H Base -2 Door **1 Dwr**
	B27	27"W x 24"D x 34.5"H Base - 2 Door **1 Dwr**
	B30	30"W x 24"D x 34.5"H Base - 2 Door 1 Dwr
	B33	

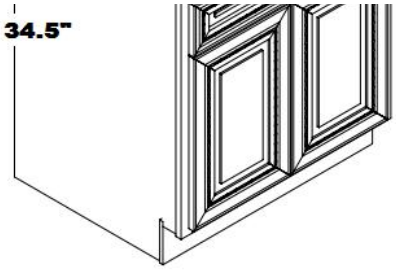	B36	33"W x 24"D x 34.5"H Base -2 Door 2 Dwr 36"W x 24"D x 34.5"H Base - 2 Door 2 Dwr
Sink Base Cabinet		
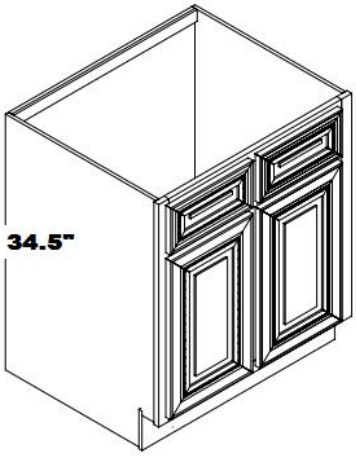	SB27 SB30 SB33 SB36	27"W x 34.5"H Sink Base 2 Doors, 1Header 30"W x 34.5"H SinkBase 2 Doors, 2 Headers* 33"W x 34.5"H Sink Base 2 Doors, 2 Headers 36"W x 34.5"H SinkBase 2 doors, 2 Headers*
Drawer Packs		Bank of Drawers
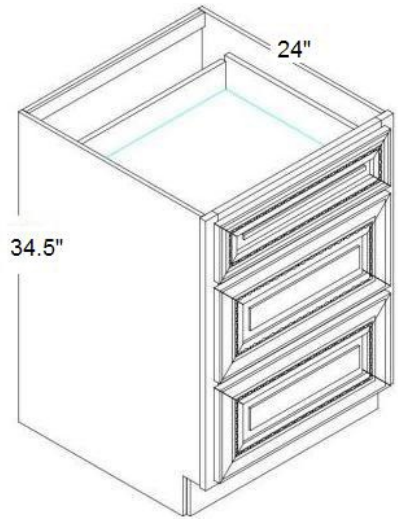	DB12 DB15 DB18 DB21 DB24 DB30 DB36	12"W x 24"D x 34.5"H - 3 Drawers 15"W x 24"D x 34.5"H - 3 Drawers* 18"W x 24"D x 34.5"H - 3 Drawers* 21"W x 24"D x 34.5"H - 3 Drawers 24"W x 24"D x 34.5"H - 3 Drawers 30"W x 24"D x 34.5"H - 3 Drawers 36"W x 24"D x 34.5"H - 3 Drawers
Corner Base Cabinets		**Lazy Susan / Easy Reach**
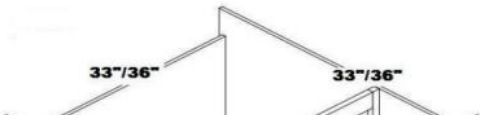	LS3309	33"W x 24"D Lazy Susan with 2 revolving shelves **(Bi-fold doors 9"each)**

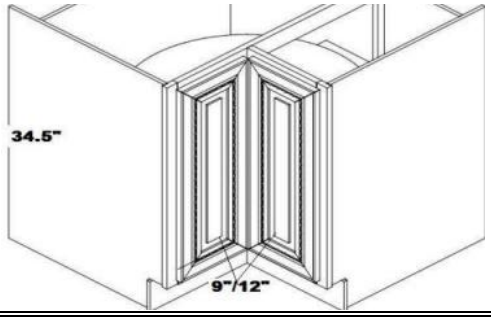

LS3309S	33"W x 24"D Easy Reach with fixed shelf **(Bi-fold doors 9"each)**
LS3612	36"W x 24"D Lazy Susan with 2 revolving shelves **(Bi-fold doors 12" each)**

Corner Base Cabinets | **Blind Corner Base**

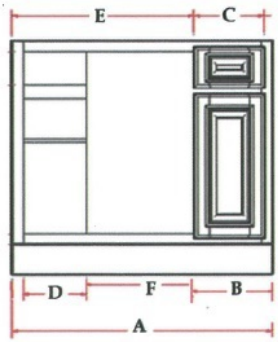

Blind Base Cabinet Specs

BBLC39/4236	36"W x 24"D x 34.5"H Blind Corner **1 door, 1 drawer** (Must Pull 39" to 42")
BBLC42/4539	39"W x 24"D x 34.5"H Blind Corner **1 door, 1 drawer** (Must Pull 42" to 45")
BBLC45/4842	42"W x 24"D x 34.5"H Blind Corner **1 door, 1 drawer** (Must Pull 45" to 48")

These cabinets are reversible and can be used left or right

BBLC394236

A: 36"	ALL LINES
B	11-3/4"
C	11-9/16"
D	8-7/8"
E	24-1/4"
F	13-3/4"

**** Min. Pull from: 39"W to 42"W***

BBLC424539

A: 39"	ALL LINES
B	14-3/4"
C	14-9/16"
D	11-7/8"
E	24-1/4"
F	10-3/4"

**** Min. Pull from: 42"W to 45"W***

BBLC454842

A: 42"	ALL LINES
B	
C	
D	
E	
F	

Corner Base Front

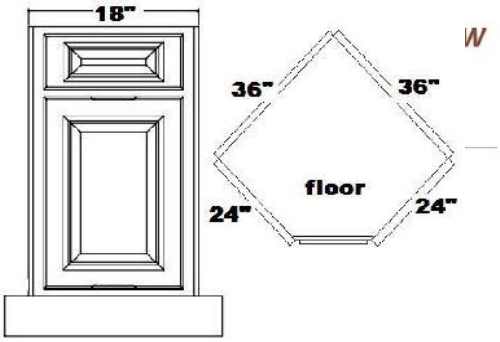

Diagonal Corner Base Front

BDCF36K-FL	Diagonal Corner Front 18"W x 34.5"H ***Face frame,1 Door, Floor (24" x 36") Not a cabinet.***

Diagonal Corner Sink | **Corner Base**

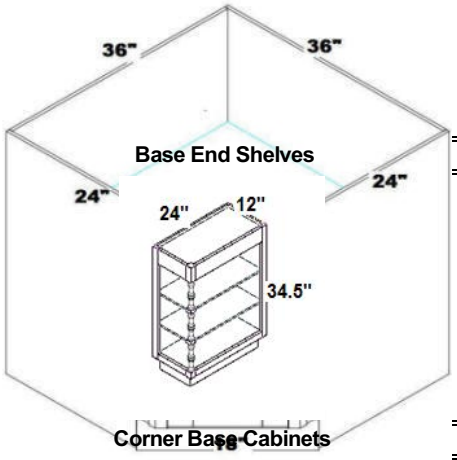	BDCF36	36"W x 24"D Diagonal Sink Base
Base End Shelves		**End Shelves**
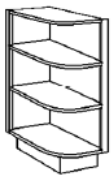	BES24 BEF24	Base End Shelf 12"W x 24"D x 34.5"H Spindle Base End Shelf 12"W x 24"D x 34.5"H (reversible - install toe kick)
Corner Base Cabinets		**Angle Base**
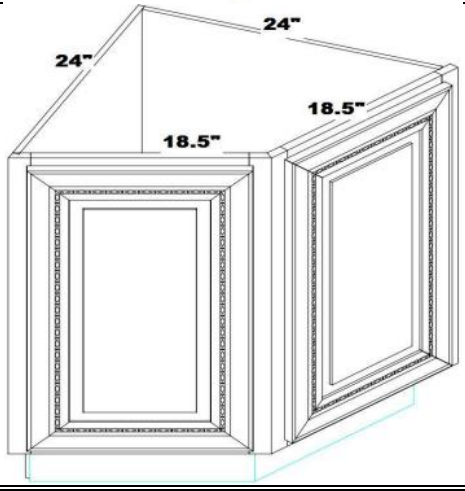	AB24	Angle Base Cabinet 24"W x 24"D x 34-1/2H ***2 Doors, 1 Adjustable Shelf***
Tall Cabinets		**Pantry**
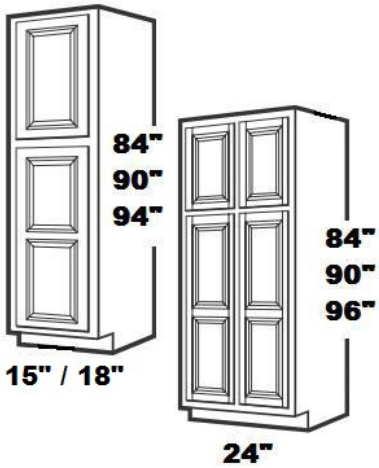	WP1584 WP1590 WP1596 WP1884 WP1890 WP1896 WP2484 WP2490 WP2496	Pantry 15"W x 24"D x 84"H - 2 door Pantry 15"W x 24"D x 90"H - 2 door Pantry 15"W x 24"D x 96"H - 2 door Pantry 18"W x 24"D x 84"H - 2 door Pantry 18"W x 24"D x 90"H - 2 door Pantry 18"W x 24"D x 96"H - 2 door Pantry 24"W x 24"D x 84"H - 4 door Pantry 24"W x 24"D x 90"H - 4 door Pantry 24"W x 24"D x 96"H - 4 door **** 1 fixed & 3 adjustable shelves*** ****BrandyWine has 1 fixed & 4 adjustable shelves***
Tall Cabinet		**Oven**
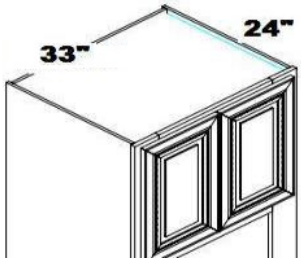	OC3384 OC3390 OC3396	33"W x 24"D x 84"H - 2 door, 2 drawer** 33"W x 24"D x 90"H - 2 door, 2 drawer** 33"W x 24"D x 96"H - 2 door, 2 drawer** *****Opening 32-1/2" x 31-9/16"*** **Brandy Wine opening - 24"W x 24"H**

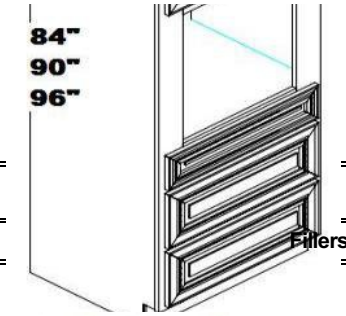

Accessories

Fillers		Wall and Base Fillers
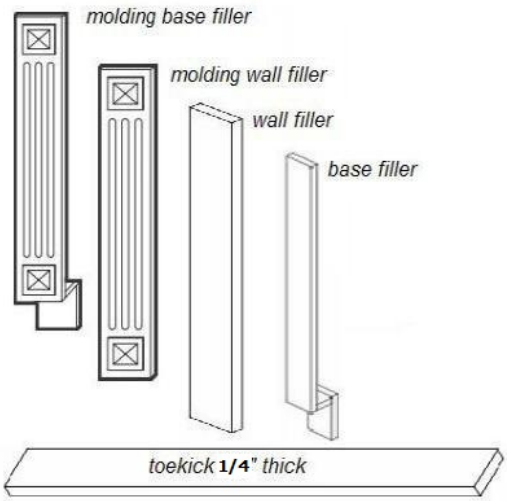	AB3F	Fluted Base Filler - 3" x 34.5"
	AB6F	Fluted Base Filler - 6" x 34.5"
	A15WF	Fluted Wall Filler - 3" x 15"
	A24WF	Fluted Wall Filler - 3" x 24"
	A30WF	Fluted Wall Filler - 3" x 30"
	A36WF	Fluted Wall Filler - 3" x 36"
	A42WF	Fluted Wall Filler - 3" x 42"
	BF3	Base Filler 3" x 34-1/2" x 3/4T
	BF6	Base Filler 6" x 34-1/2" x 3/4T
	WF3	Wall Filler 3" x 30" x 3/4"T
	WF6	Wall Filler 6" x 30" x 3/4"T
	WF336	Wall Filler - 3" x 36" x 3/4"T
	WF342	Wall Filler - 3" x 42" x 3/4"T
	WF384	Wall Filler - 3" x 84" x 3/4"T
	WF396	Wall Filler - 3" x 96" x 3/4"T
	TK8	Toe Kick - 4.5" x 8' long
	VA696	Filler/Valance - 6" x 96" x 3/4"T

Molding		Molding & Trim
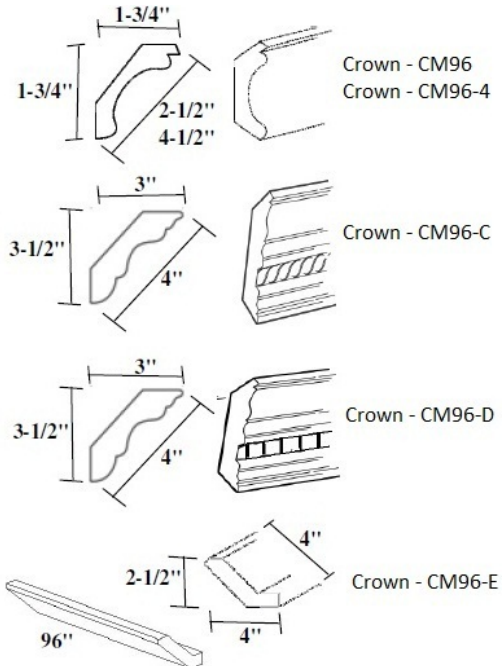	CM96 CM96-4	Crown Molding - 2 1/2" x 96" BrandyWine Crown Molding - 2 1/4" x 96" Crown Molding - 4 1/2" x 96" BrandyWine Crown Molding - 3-1/8" x 96"
	CM96C-4	Crown Rope Molding - 4" x 96"
	CM96D-4	Crown Dentil Molding - 4" x 96"
	CM96E-4	Shaker Crown Molding - 4" x 96" Bamboo Crown Molding - 4" x 96"
	LRM8	Under Wall Cabinet molding -1" x 1.5" x 96" (LRM8)

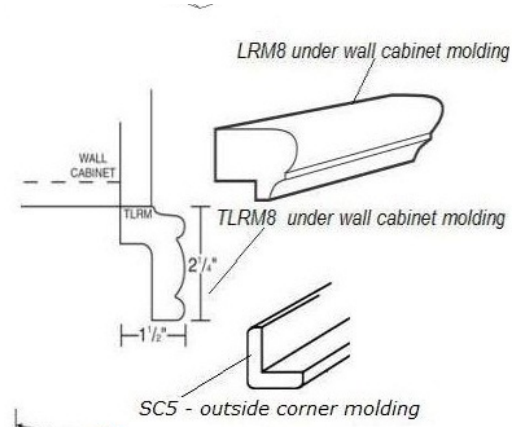

TLRM8	Under Wall Cabinet Molding 2.25" x 1.5" x 96" (TLRM8)
SC5	Outside Corner Molding 3/4" x 3/4" x 96"
SC3-1	Scribe Molding 3/4" x 1/4" x 96"
SC4	Inside Cnr Molding 3/4" x 3/4" x 96"

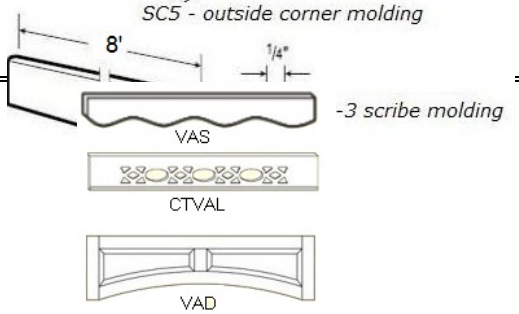

VAS48	Sculptured Valance - 4.5" W x 48" L
CTVAL36 CTVAL48	Country Valance - 5"W x 36"L Country Valance - 5"W x 48"L
VAD36 VAD42 VAD48	Raised Panel Valance - 12"W x 36"L Raised Panel Valance - 12"W x 42"L Raised Panel Valance - 12"W x 48"L

Decorative Base and Wall End Panels		Door End Panels
	EPW1230D	Wall End Panel - 11 1/2"W x 29 3/8"H
	EPW1236D	Wall End Panel - 11 1/2"W x 35 3/8"H
	EPW1242D	Wall End Panel - 11 1/2"W x 41 3/8"H
	EPB24D	Base End Panel - 23 1/2"W x 29 3/8"H
	DOWD1212	Wall End Panel - 11 1/2"W x 11 1/2"H
	DOWD1230	Wall End Panel - 11 1/2"W x 29 3/8"H
	DOBD1212	Base End Panel - 23 1/2"W x 29 3/8"H

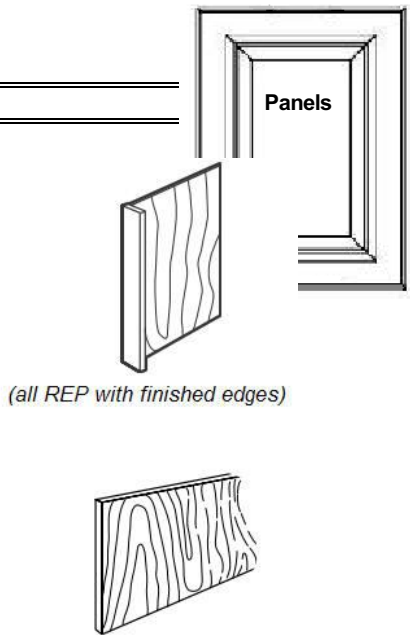

	Finished Panels
BEP334	24" x 34 1/2" x 3" Dishwasher End Panel
DWR	24" x 34 1/2" x 3" Dishwasher End Panel
REP2484-3	24" x 84" x 3" Refrigerator End Panel
REP2496-3	24" x 96" x 3" Refrigerator End Panel
REP2484	24" x 84" Refrigerator End Panel
REP2496	24" x 96" Refrigerator End Panel
WP-1230	12"W X 30"H Wall Panel Skin
BP4896 & FEP4896	48" x 96" x 1/4" Finished Back Panel (1 side finished, vertical grain)
FEP1242	12" x 42" x 1/4" Finished End Panel
FEP2435	24" x 35" x 1/4" Finished End Panel

GR48	Plate Rail Molding - 48"L x 2-1/8"W
Leg81	Contemporary Leg - 34-1/2"H x 3" x 1-1/2"
TP3-WF34	Traditional Leg - 34-1/2"H x 3" x 3" (includes a wall filler 34-1/2")
Corbel54	Traditional Corbel54 - 6"H x 4"W

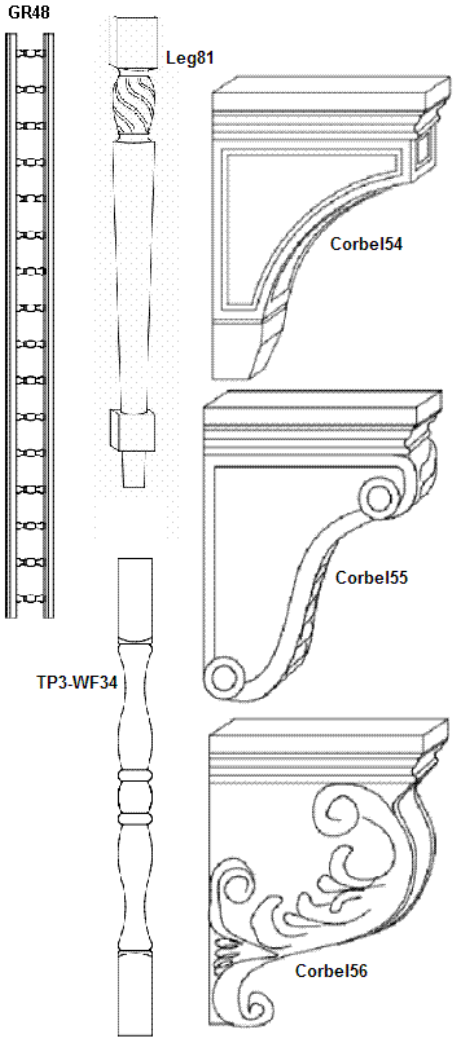

Corbel55	Contemporary Corbel55 - 6"H x 4"W
Corbel56	Fancy Corbel56 - 6"H x 4"W

HOME